BRAKES, PEDAL - Z26NEY99A4/B4/A6/B6 (C760070)

2026 RZR - RZR XP S 1000 ULTIMATE (R01) - Z26NEY99A4/B4/A6/B6

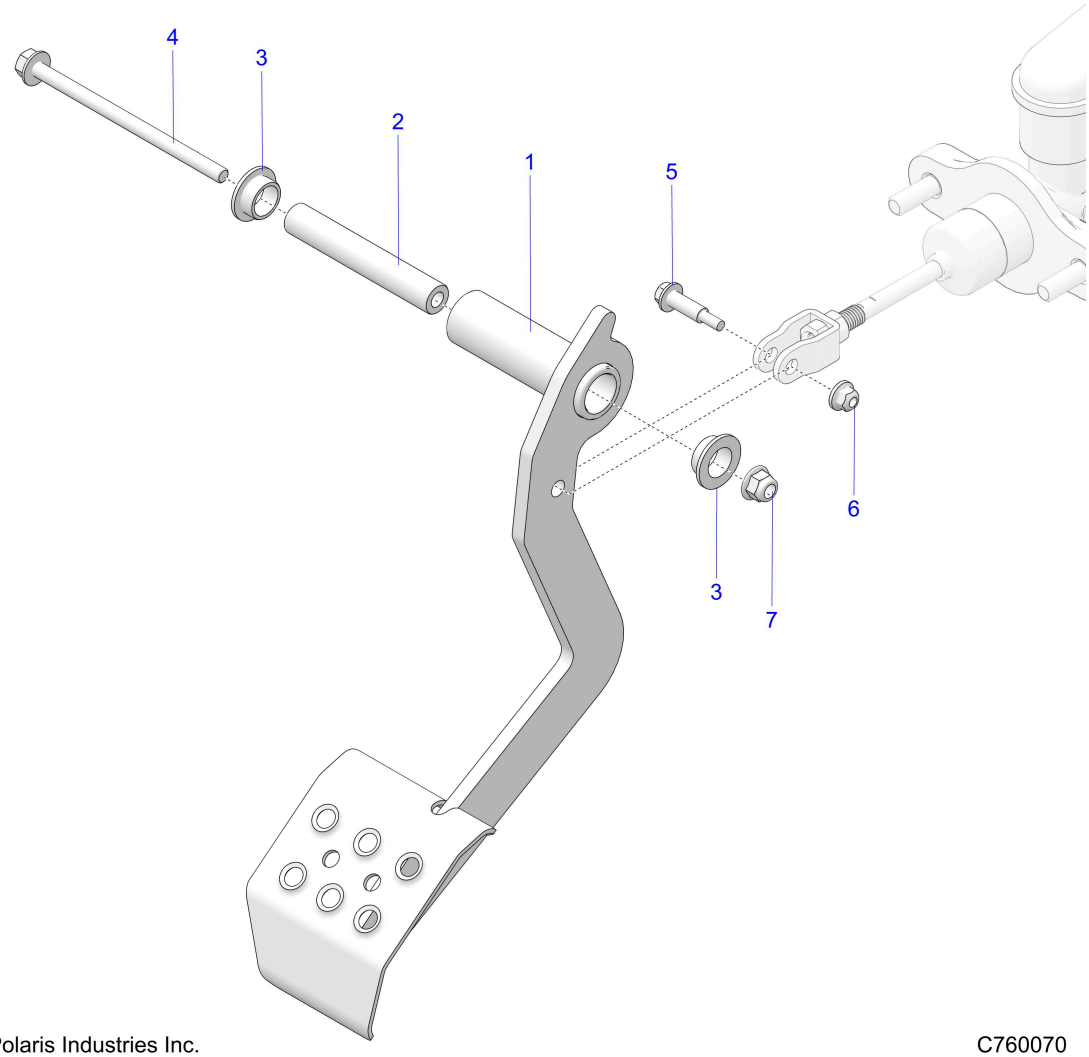

© 2025 Polaris Industries Inc. C760070

Reference #	*Part#*	*Description*	*Quantity*
1	1025542-329	WELD-BRAKE PEDAL,ECOAT	1
2	5342467	TUBE-SPACER	2
3	5439274	BUSHING-PEDAL PIVOT	1
4	7519737	SCR-HXFL-M6X1.0X100 8.8 ZOD	1
5	7521227	BOLT,M5X0.8X10,16.5 SHLD	1
6	7547427	NUT-M5X0.8 8.8 HX/FL NYLOC	1
7	7547453	NUT-HXFL-M6X1.0 8 ZB3 NYL	1

Copyright 1996-2026 Polaris Industries U.S.A All rights reserved.